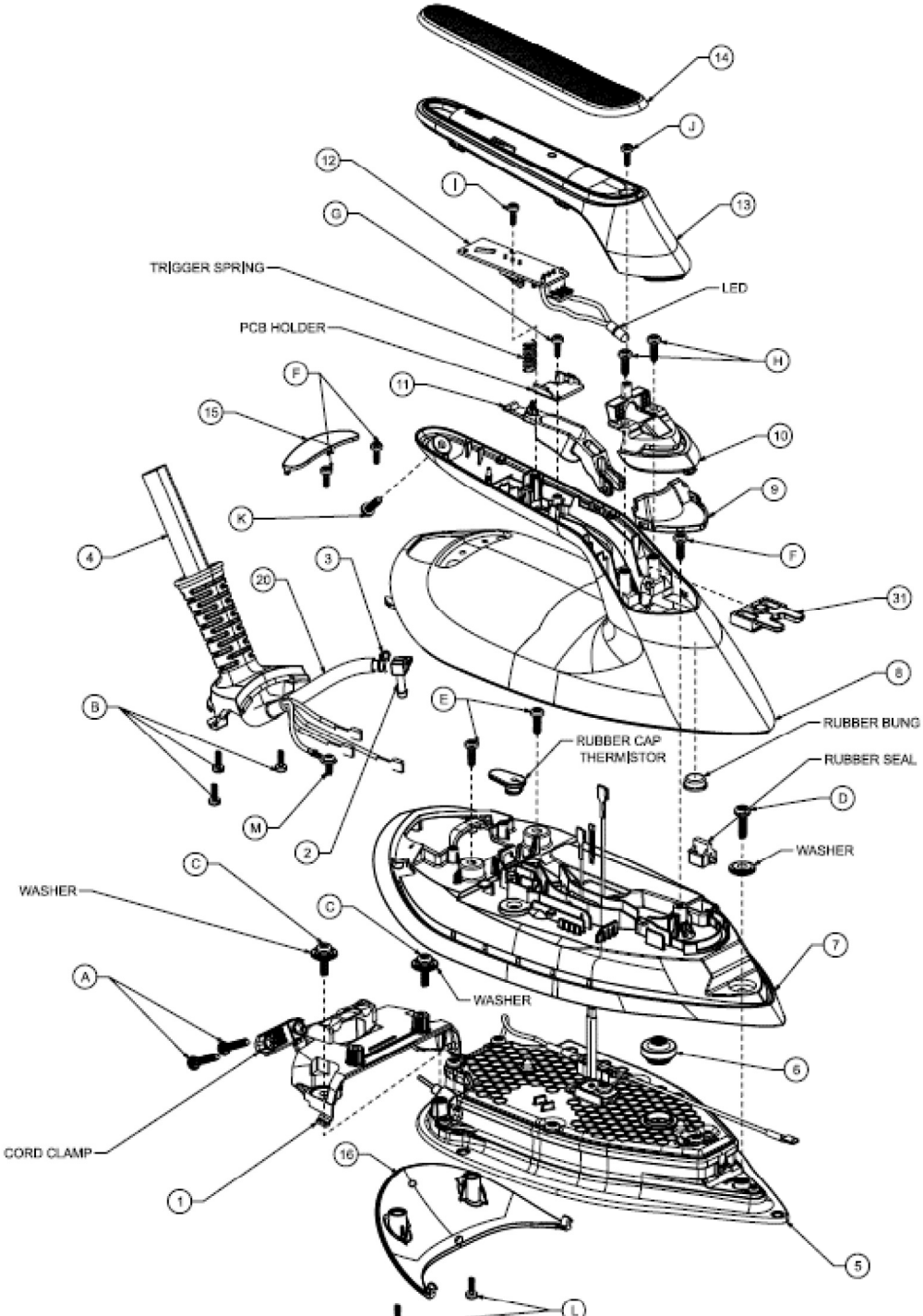
14
J
12
I
13
G
TRIGGER SPRING
LED
PCB HOLDER
H
F
11
15
10
K
9
4
3
F
20
31
8
B
E
RUBBER BUNG
RUBBER CAP
THERMISTOR
RUBBER SEAL
D
M
2
WASHER
C
WASHER
C
7
A
WASHER
6
CORD CLAMP
16
1
5
L

V2

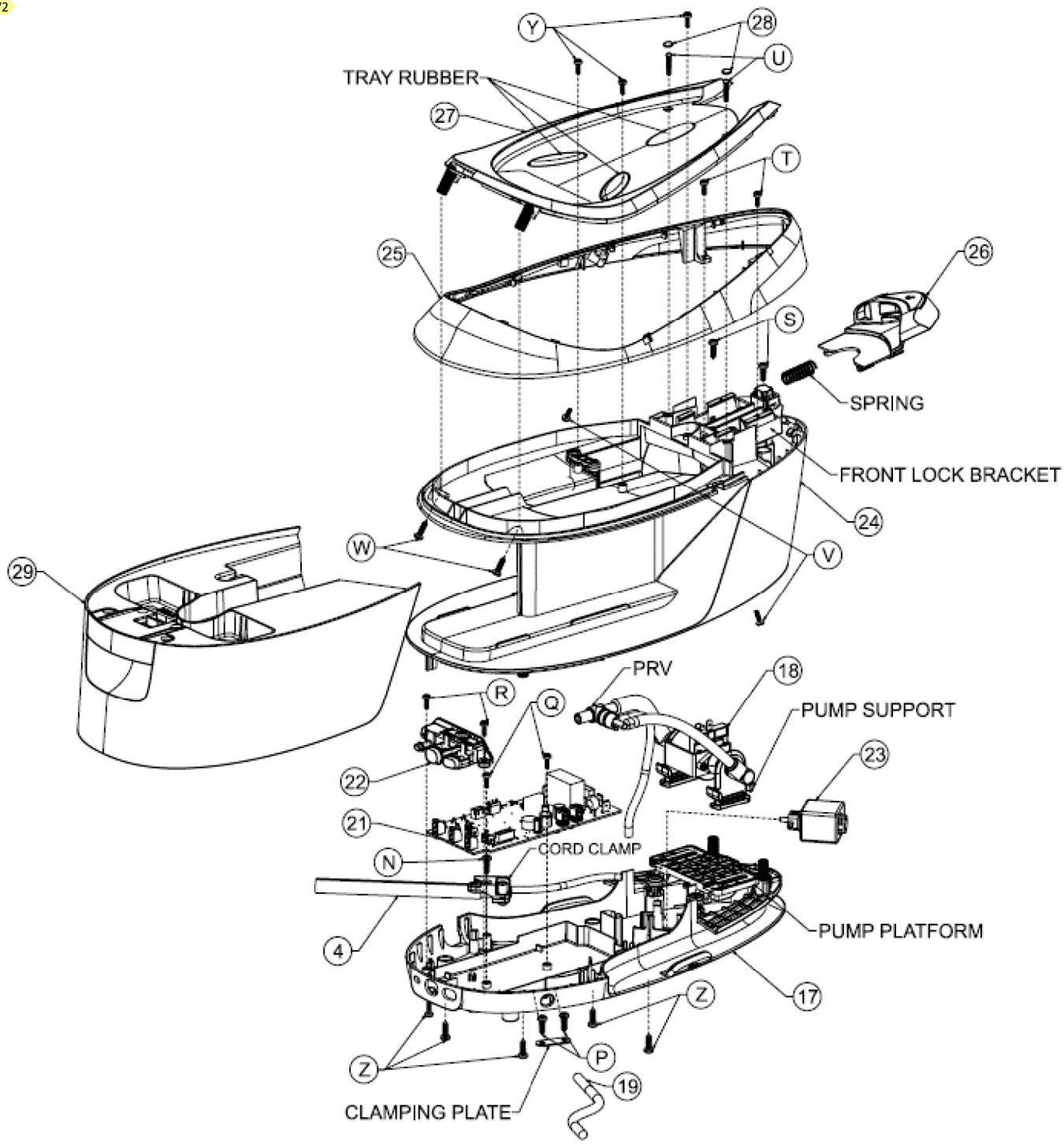
Y
28
U
TRAY RUBBER
27
T
25
26
S
SPRING
FRONT LOCK BRACKET
24
W
V
29
PRV
18
R
Q
PUMP SUPPORT
23
22
21
CORD CLAMP
N
PUMP PLATFORM
4
17
Z
Z
P
19
CLAMPING PLATE